# Steering Wheel Control Interface

To suit Subaru

# ASSU3C

Steering wheel controls | Antenna

*If originally fitted. Also provides park brake, reverse and speed signal (VSS) outputs.

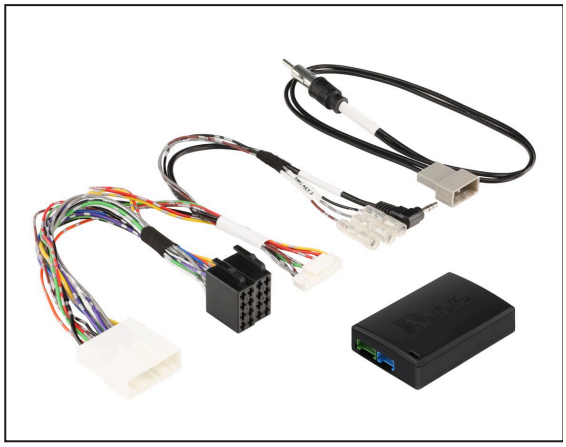

## Vehicle Fitment

This interface suits the vehicles below.

| Vehicle | Year |
|---|---|
| Subaru Liberty | 2009 - 2014 |
| Subaru Outback | 2009 - 2014 |

**Before you start:** read this manual in full. Installation needs technical knowledge. Your head unit must be SWC compatible, and steering wheel functions may differ from the factory functions. Always disconnect the module before changing any DIP switch.

## Installation Steps

Complete these four steps in order to finish the installation.

1. Set vehicle DIP switches
2. Set stereo DIP switches
3. Connect the interface
4. Set up your head unit

## 1 Set the vehicle DIP switches (1 to 8)

Disconnect the module before changing any DIP switch. DIP switch: ON OFF

**ALL VEHICLES**

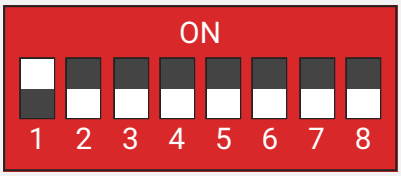


Switch 1 ON, all others OFF

## 2 Set the stereo DIP switches (1 to 4)

Set switches 1 to 4 for your head unit brand.

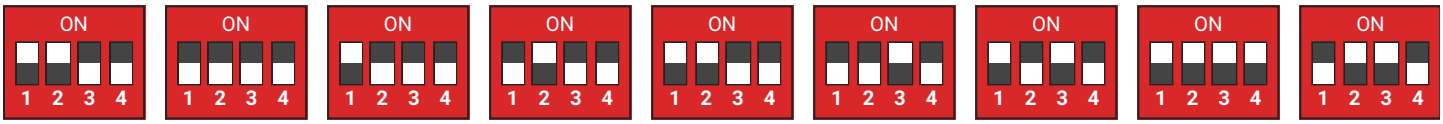


Not listed? Use **Program** and set up SWC Learning in your head unit (see Step 4).

## 3 Connect the interface

Connect the vehicle plug and ISO plugs, then use the SWC connection that matches your head unit. Most head units only need one.

| Your head unit | Connect |
|---|---|
| Aerpro AM905D, AM1005D, Pioneer DMH-AP6650BT | **8-pin connector and 3.5mm jack** |
| Aerpro (other), Alpine, Pioneer, Sony, Nakamichi | **3.5mm jack** to the head unit SWC input |
| Kenwood, JVC | **Key 1 lead** to the SWC wire (SWC function only) |
| Android head units, Nakamichi Android, Alpine INE-AW409S, INE-AX809 | **8-pin connector** (or Key 1, Key 2 and GND) |
| No plug-in SWC input | **Key 1 lead**, plus Key 2 and GND if needed |

Kenwood 8-pin: a separate Kenwood adaptor is needed for UART functionality.

### Step 3 wiring diagram

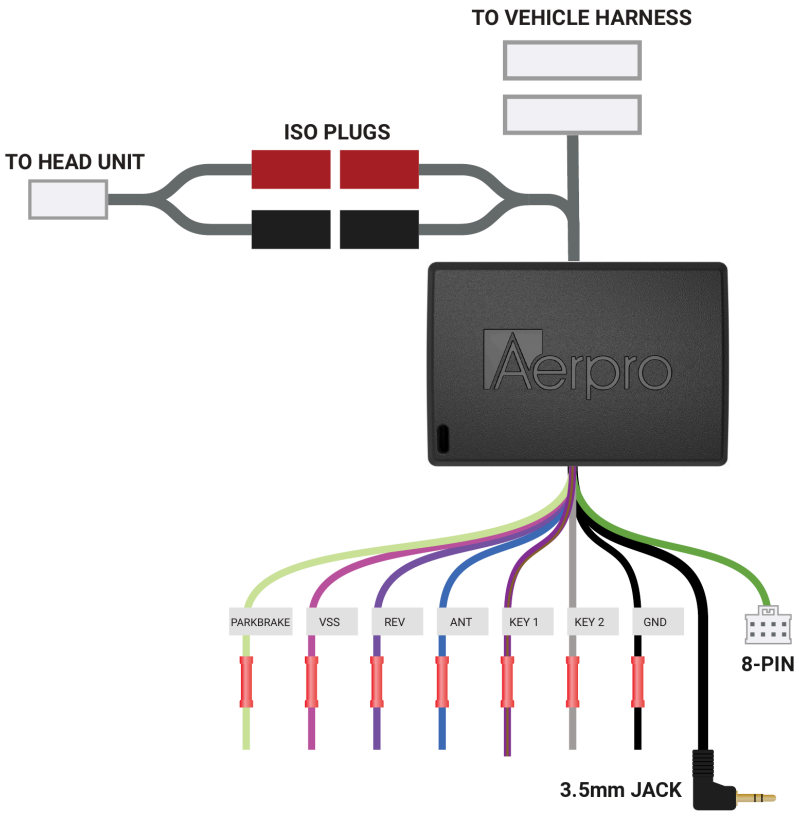


## 4 Set up your head unit

Find your head unit brand below and follow the setup for it.

| Head unit | Setup |
|---|---|
| **Aerpro**<br>Incl. AM905D, AM1005D, AM9X, AM10X | • **3.5mm jack:** set stereo DIP switches to 1-ON, 2-ON, 3-OFF, 4-OFF. Go to Settings > Steering Wheel Control > With Adapter.<br>• **8-pin adaptor:** reset the unit > select Hiworld > select vehicle type > program SWC as shown on screen. Factory vehicle info will display. |
| **Alpine, JVC, Kenwood** | Work straight away, no setup needed. |
| **Nakamichi** | Presets: NA3615 (W7, W9, WX, M9, MX), NA3510-M7, NA3625 (W6, WUX). |
| **Pioneer**<br>Other models | Settings > Steering Wheel Control > With Adapter. |
| **Pioneer**<br>Incl. DMH-AP6650BT | • **3.5mm jack:** set stereo DIP switches to 1-ON, 2-ON, 3-OFF, 4-OFF. Go to Settings > Steering Wheel Control > With Adapter.<br>• **8-pin adaptor:** reset the unit > select Hiworld > select vehicle type > program SWC as shown on screen. Check the Pioneer website for compatibility. |
| **Sony** | Settings > General > Steering Control > Preset. If Preset doesn't work, set stereo DIP switches to 1-OFF, 2-ON, 3-ON, 4-OFF and use Custom. |

| Head unit | Setup |
| --- | --- |
| **Android head units**<br>Incl. Aerpro AM1205D, Alpine INE-AW409S, INE-AX809, Nakamichi Android | Connect the 8-pin (CANBUS) plug, or Key 1, Key 2 and GND.<br>• **With CANBUS:** set stereo DIP switches to Android > Factory Settings. Alpine password 1967. Nakamichi password 1948, then select Hiworld as provider and choose vehicle type.<br>• **Without CANBUS:** set stereo DIP switches to Program > select SWC Learning in the head unit menu. |

## Factory 360° Camera Control (If applicable)

When the vehicle is in factory 360° camera mode, press the MODE and PREVIOUS buttons on the steering wheel to change the camera view.

## Final Check

With the ignition ON, check everything works before refitting the dash.

- [ ] Each steering wheel button works
- [ ] Volume works through the factory amplifier (if fitted)
- [ ] Reverse camera shows in reverse (if fitted)
- [ ] Radio reception is clear
- [ ] USB and AUX play (if fitted)

**Scan to view ASSU3C on aerpro.com**
aerpro.com/assu3c

## Technical Support

Need help setting up or using your Aerpro product? Call Aerpro Support Australia on **03 8587 8889**, Monday to Friday, 9am to 5pm AEST. Download a digital copy of this manual and other Aerpro manuals and software at **aerpro.com**.