Steering Wheel Control Interface

To suit Toyota

ASSU17C

Steering wheel controls **Reverse camera*** **Antenna**

*If originally fitted. Also provides park brake, reverse and speed signal (VSS) outputs.

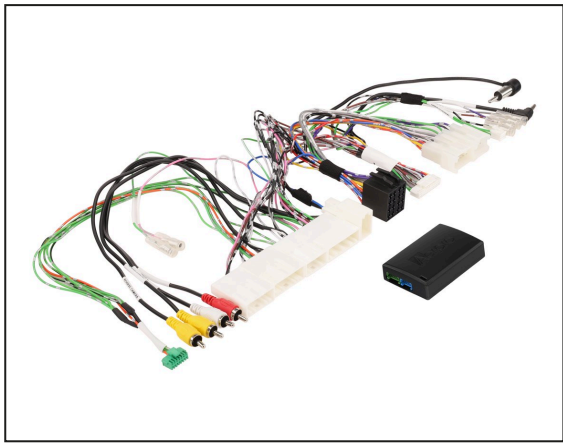

Vehicle Fitment

This interface suits 47 vehicles. See the full fitment list on the next page and note your DIP setting (A or B).

Before you start: read this manual in full. Installation needs technical knowledge. Your head unit must be SWC compatible, and steering wheel functions may differ from the factory functions. Always disconnect the module before changing any DIP switch.

Installation Steps

Complete these four steps in order to finish the installation.

1	2	3	4
Set vehicle DIP switches	Set stereo DIP switches	Connect the interface	Set up your head unit

Vehicle Fitment

This interface suits the vehicles below.

Vehicle	Year	DIP setting
Toyota 86	2012 - 2015	A or B
Toyota 86	2016 onwards	A or B
Toyota Alphard	2007 - 2013	A or B
Toyota Alphard	2015 onwards	A or B
Toyota Avensis Verso	2000 - 2009	A or B
Toyota Aurion	2006 - 2015	A or B
Toyota Aurion	2015 - 2018	A or B
Toyota Camry	2002 - 2017	A or B
Toyota Celica	1999 - 2005	A or B
Toyota CHR	2016 - 2019	A or B
Toyota Corolla	2002 - 2011	A or B
Toyota Corolla Sedan	2013 - 2016	A or B
Toyota Corolla Hatch	2012 - 2018	A or B
Toyota Echo	1999 - 2005	A or B
Toyota Estima Tarago (W/SWC)	2001 - 2006	A or B
Toyota Estima Tarago	2006 onwards	A or B
Toyota FJ Cruiser	2011 - 2015	A or B
Toyota Fortuner Standard	2015 - 2020	A or B
Toyota Hiace	2004 - 2011	A or B
Toyota Hiace	2012 - 2019	A or B
Toyota Hilux	2005 - 2011	A or B
Toyota Hilux (Manual A/C)	2012 - 2013	A or B
Toyota Hilux (Manual A/C)	2014	A or B
Toyota Hilux (Auto A/C)	2012 - 2013	A or B
Toyota Hilux (Auto A/C)	2014	A or B
Toyota Hilux (Standard)	2015 - 2020	A or B
Toyota Kluger	2003 - 2013	A or B
Toyota Kluger Grande	2007 - 2013	A or B
Toyota Landcruiser (LC70 LC79)	1984 - 2023	A or B
Toyota Landcruiser Sahara	1999 - 2006	A or B
Toyota Landcruiser (W/SWC)	2002 - 2006	A or B

Vehicle	Year	DIP setting
Toyota Landcruiser 200 Series	2007 - 2015	A or B
Toyota Landcruiser 200 Series (GX Only)	2016 - 2021	A or B
Toyota MR2	2000 - 2002	A or B
Toyota Noah	2008 - 2021	A or B
Toyota Prado	2003 - 2009	A or B
Toyota Prado (Standard)	2009 - 2013	A or B
Toyota Prado	2014 - 2017	A or B
Toyota Prius	2004 - 2015	A or B
Toyota Prius V	2012 - 2019	A or B
Toyota Rav 4 (W/SWC)	2001 - 2005	A or B
Toyota Rav 4	2006 - 2018	A or B
Toyota Rukus	2006 onwards	A or B
Toyota Spade	2012 onwards	A or B
Toyota Voxy	2008 - 2021	A or B
Toyota Yaris (W/SWC)	2005 - 2011	A or B
Toyota Yaris	2011 - 2019	A or B

1 Set the vehicle DIP switches (1 to 8)

Disconnect the module before changing any DIP switch. DIP switch: ON OFF

This interface uses Setting A or B.

A

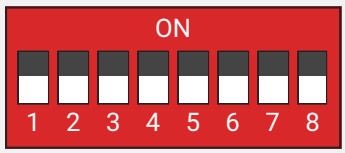

All switches OFF

B

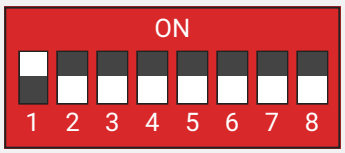

Switch 1 ON, all others OFF

2 Set the stereo DIP switches (1 to 4)

Set switches 1 to 4 for your head unit brand.

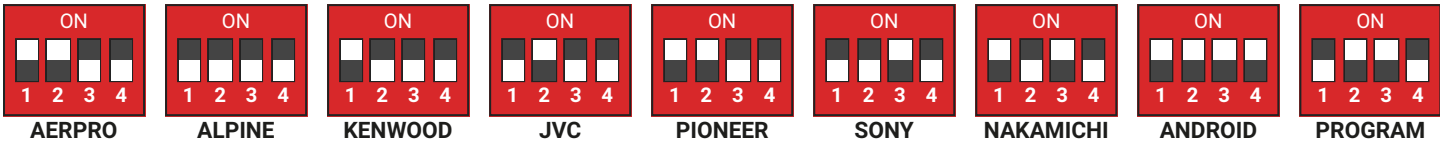

Not listed? Use **Program** and set up SWC Learning in your head unit (see Step 4).

3 Connect the interface

Connect the vehicle plug and ISO plugs, then use the SWC connection that matches your head unit. Most head units only need one.

Your head unit	Connect
Aerpro AM905D, AM1005D, Pioneer DMH-AP6650BT	**8-pin connector and 3.5mm jack**
Aerpro (other), Alpine, Pioneer, Sony, Nakamichi	**3.5mm jack** to the head unit SWC input
Kenwood, JVC	**Key 1 lead** to the SWC wire (SWC function only)
Android head units, Nakamichi Android, Alpine INE-AW409S, INE-AX809	**8-pin connector** (or Key 1, Key 2 and GND)
No plug-in SWC input	**Key 1 lead**, plus Key 2 and GND if needed

Kenwood 8-pin: a separate Kenwood adaptor is needed for UART functionality.

Step 3 wiring diagram

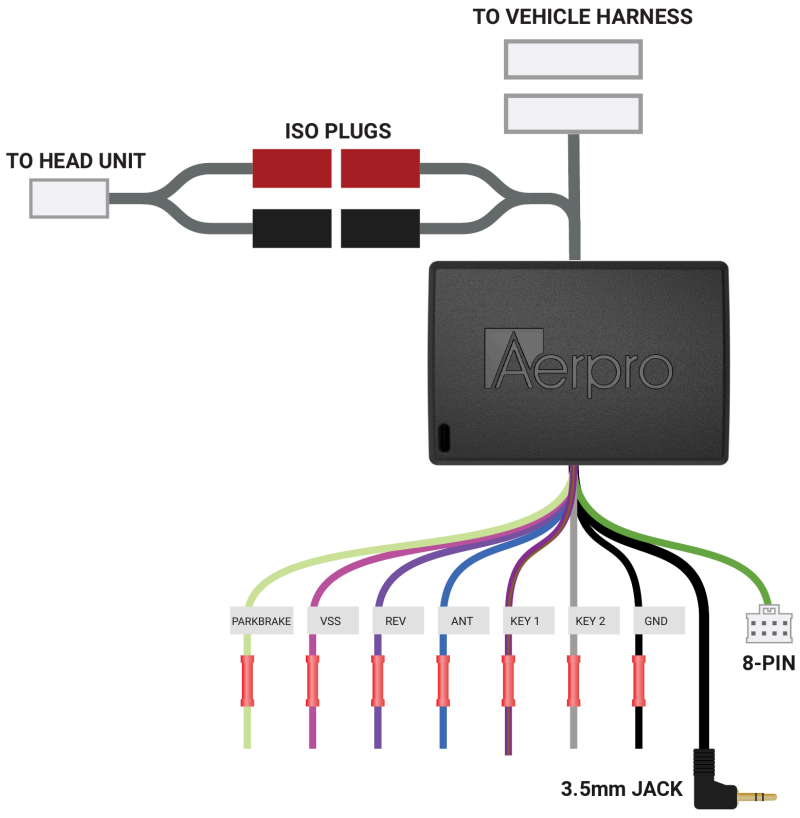

4 Set up your head unit

Find your head unit brand below and follow the setup for it.

Head unit	Setup
Aerpro Incl. AM905D, AM1005D, AM9X, AM10X	• **3.5mm jack:** set stereo DIP switches to 1-ON, 2-ON, 3-OFF, 4-OFF. Go to Settings > Steering Wheel Control > With Adapter. • **8-pin adaptor:** reset the unit > select Hiworld > select vehicle type > program SWC as shown on screen. Factory vehicle info will display.
Alpine, JVC, Kenwood	Work straight away, no setup needed.
Nakamichi	Presets: NA3615 (W7, W9, WX, M9, MX), NA3510-M7, NA3625 (W6, WUX).
Pioneer Other models	Settings > Steering Wheel Control > With Adapter.
Pioneer Incl. DMH-AP6650BT	• **3.5mm jack:** set stereo DIP switches to 1-ON, 2-ON, 3-OFF, 4-OFF. Go to Settings > Steering Wheel Control > With Adapter. • **8-pin adaptor:** reset the unit > select Hiworld > select vehicle type > program SWC as shown on screen. Check the Pioneer website for compatibility.
Sony	Settings > General > Steering Control > Preset. If Preset doesn't work, set stereo DIP switches to 1-OFF, 2-ON, 3-ON, 4-OFF and use Custom.
Android head units Incl. Aerpro AM1205D, Alpine INE-AW409S, INE-AX809, Nakamichi Android	Connect the 8-pin (CANBUS) plug, or Key 1, Key 2 and GND. • **With CANBUS:** set stereo DIP switches to Android > Factory Settings. Alpine password 1967. Nakamichi password 1948, then select Hiworld as provider and choose vehicle type. • **Without CANBUS:** set stereo DIP switches to Program > select SWC Learning in the head unit menu.

Factory 360° Camera Control (If applicable)

When the vehicle is in factory 360° camera mode, press the MODE and PREVIOUS buttons on the steering wheel to change the camera view.

Final Check

With the ignition ON, check everything works before refitting the dash.

- ☐ Each steering wheel button works
- ☐ Volume works through the factory amplifier (if fitted)
- ☐ Reverse camera shows in reverse (if fitted)
- ☐ Radio reception is clear
- ☐ USB and AUX play (if fitted)

Scan to view ASSU17C on aerpro.com
aerpro.com/assu17c

Technical Support

Need help setting up or using your Aerpro product? Call Aerpro Support Australia on **03 8587 8889**, Monday to Friday, 9am to 5pm AEST. Download a digital copy of this manual and other Aerpro manuals and software at **aerpro.com**.