Steering Wheel Control Interface

To suit Nissan

ASNI25C

Steering wheel controls | 360° camera* | USB* | Antenna

*If originally fitted. Also provides park brake, reverse and speed signal (VSS) outputs.

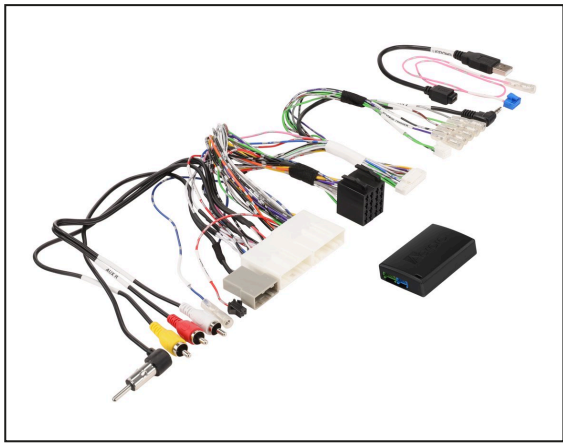

Vehicle Fitment

Find your vehicle and note its DIP setting (A or B). You'll need it in Step 1.

Vehicle	Year	DIP setting
Nissan Altima	2013 - 2016	A
Nissan Navara D23	2015 - 2020	A
Nissan Qashqai	2014 - 2021	A
Nissan X-Trail	2014 - 2022	A
Nissan Juke	2010 - 2018	B

Before you start: read this manual in full. Installation needs technical knowledge. Your head unit must be SWC compatible, and steering wheel functions may differ from the factory functions. Always disconnect the module before changing any DIP switch.

Installation Steps

Complete these four steps in order to finish the installation.

1. Set vehicle DIP switches
2. Set stereo DIP switches
3. Connect the interface
4. Set up your head unit

1 Set the vehicle DIP switches (1 to 8)

Disconnect the module before changing any DIP switch. DIP switch: ON OFF

Use the setting for your vehicle from the fitment table.

A

Altima, Navara D23, Qashqai, X-Trail

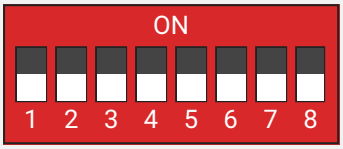

All switches OFF

B

Nissan Juke 2010 - 2018

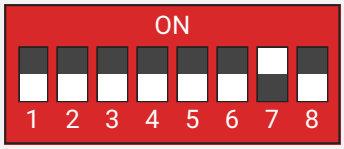

Switch 7 ON, all others OFF

2 Set the stereo DIP switches (1 to 4)

Set switches 1 to 4 for your head unit brand.

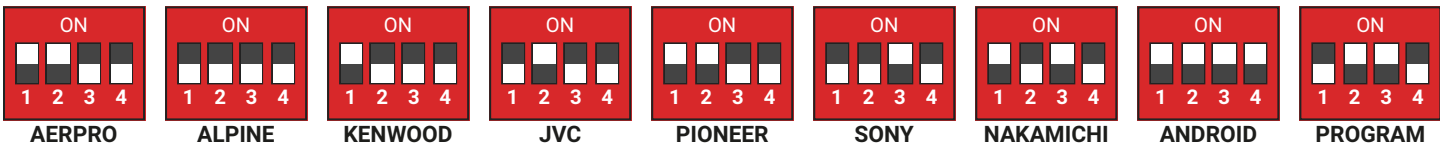

Not listed? Use **Program** and set up SWC Learning in your head unit (see Step 4).

3 Connect the interface

Connect the vehicle plug and ISO plugs, then use the SWC connection that matches your head unit. Most head units only need one.

Your head unit	Connect
Aerpro AM905D, AM1005D, Pioneer DMH-AP6650BT	**8-pin connector and 3.5mm jack**
Aerpro (other), Alpine, Pioneer, Sony, Nakamichi	**3.5mm jack** to the head unit SWC input
Kenwood, JVC	**Key 1 lead** to the SWC wire (SWC function only)
Android head units, Nakamichi Android, Alpine INE-AW409S, INE-AX809	**8-pin connector** (or Key 1, Key 2 and GND)
No plug-in SWC input	**Key 1 lead**, plus Key 2 and GND if needed

Kenwood 8-pin: a separate Kenwood adaptor is needed for UART functionality.

Step 3 wiring diagram

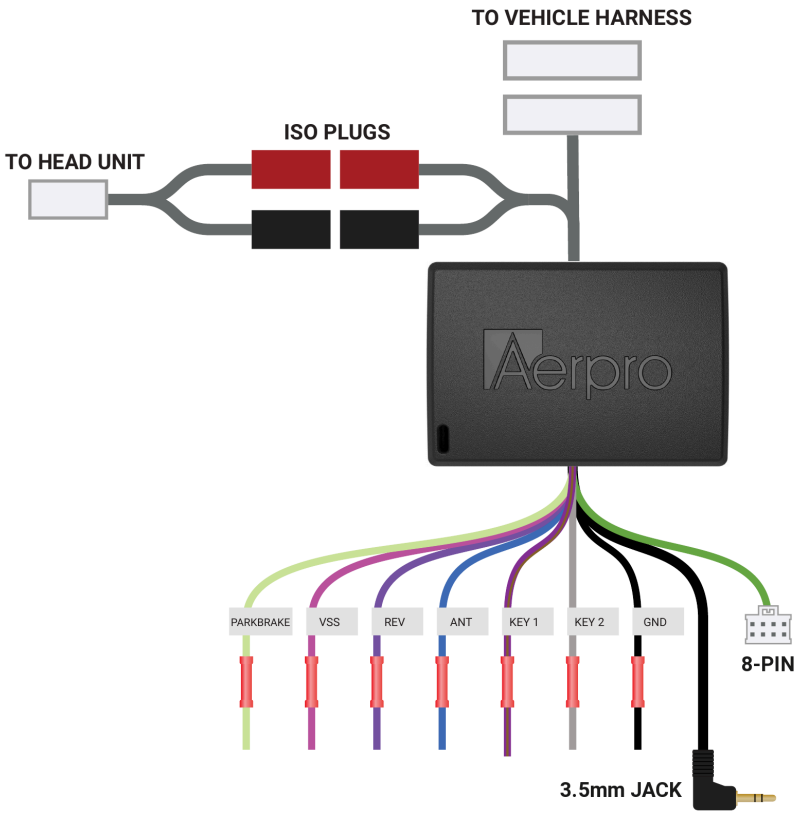

4 Set up your head unit

Find your head unit brand below and follow the setup for it.

Head unit	Setup
Aerpro Incl. AM905D, AM1005D, AM9X, AM10X	• **3.5mm jack:** set stereo DIP switches to 1-ON, 2-ON, 3-OFF, 4-OFF. Go to Settings > Steering Wheel Control > With Adapter. • **8-pin adaptor:** reset the unit > select Hiworld > select vehicle type > program SWC as shown on screen. Factory vehicle info will display.
Alpine, JVC, Kenwood	Work straight away, no setup needed.
Nakamichi	Presets: NA3615 (W7, W9, WX, M9, MX), NA3510-M7, NA3625 (W6, WUX).
Pioneer Other models	Settings > Steering Wheel Control > With Adapter.
Pioneer Incl. DMH-AP6650BT	• **3.5mm jack:** set stereo DIP switches to 1-ON, 2-ON, 3-OFF, 4-OFF. Go to Settings > Steering Wheel Control > With Adapter. • **8-pin adaptor:** reset the unit > select Hiworld > select vehicle type > program SWC as shown on screen. Check the Pioneer website for compatibility.
Sony	Settings > General > Steering Control > Preset. If Preset doesn't work, set stereo DIP switches to 1-OFF, 2-ON, 3-ON, 4-OFF and use Custom.

Head unit	Setup
Android head units Incl. Aerpro AM1205D, Alpine INE-AW409S, INE-AX809, Nakamichi Android	Connect the 8-pin (CANBUS) plug, or Key 1, Key 2 and GND. • **With CANBUS:** set stereo DIP switches to Android > Factory Settings. Alpine password 1967. Nakamichi password 1948, then select Hiworld as provider and choose vehicle type. • **Without CANBUS:** set stereo DIP switches to Program > select SWC Learning in the head unit menu.

Factory 360° Camera Control (If applicable)

In Drive or Park, press and hold the **Hang Up** button on the steering wheel to turn on the factory 360° camera.

In Reverse, press the **Hang Up** button to switch between the 360° camera views.

Time Setting (on the vehicle dashboard screen) (If applicable)

On some Nissan models the time is set through the car's settings menu, not the head unit.

1. Use the Up and Down buttons on the steering wheel to set the dashboard screen to AUX, then press and hold **ENTER/PREVIOUS**. The time changes to 12:30.
2. Use the Previous and Next buttons to set the time.
3. Wait 10 seconds and the time saves automatically.

Final Check

With the ignition ON, check everything works before refitting the dash.

- ☐ Each steering wheel button works
- ☐ Volume works through the factory amplifier (if fitted)
- ☐ Reverse camera shows in reverse (if fitted)
- ☐ Radio reception is clear
- ☐ USB and AUX play (if fitted)

Scan to view ASNI25C on aerpro.com
aerpro.com/asni25c

Technical Support

Need help setting up or using your Aerpro product? Call Aerpro Support Australia on **03 8587 8889**, Monday to Friday, 9am to 5pm AEST. Download a digital copy of this manual and other Aerpro manuals and software at **aerpro.com**.