Aerpro
In-Car Tech Solutions

INSTALLATION GUIDE

APVVW06

Steering Wheel Control Interface

For Volkswagen vehicles

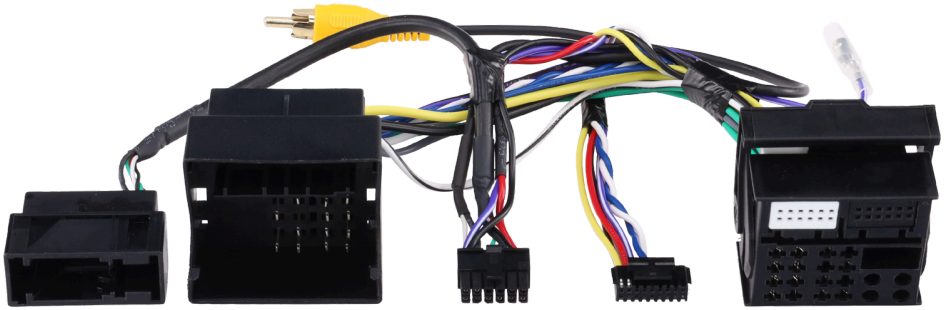



- Retain steering wheel control functionality
- Replace factory radio
- Outputs for speed pulse, park brake & reverse

OVERVIEW

Before you start

Vehicle application

Seat	
Alhambra (7N)	2010 - 2015
Altea (5P)	2009 - 2015
Ibiza (6J)	2012 - 2015
Leon (1P)	2009 - 2012
Toledo (NH)	2013 - 2015
Skoda	
Fabia (5J)	2010 - 2014
Octavia (1Z)	2009 - 2013
Rapid (NH)	2012 - 2015
Roomster (5J)	2010 - 2015
Superb (3T)	2013 - 2015
Volkswagen	
Beetle (16)	2011 - 2016
Caravelle (7H)	2009 - 2015
Caddy III (2K)	2010 - 2015
CC (3C/35)	2012 - 2016
Eos (1F)	2010 - 2015
Golf VI (1K)	2008 - 2012
Golf VI Plus (1KP)	2009 - 2014
Jetta IV (162)	2011 - 2014
Multivan (7H)	2009 - 2015
Passat B7 (3C/362)	2010 - 2014
Scirocco III (13)	2008 - 2014
Sharan II (7N)	2010 - 2015
T5 Transporter (7H)	2009 - 2015
Tiguan I (5N)	2011 - 2016
Touran (1T)	2010 - 2015

Key features

- Retain steering wheel control functionality
- Replace factory radio
- Outputs for speed pulse, park brake & reverse
- OEM camera retention – connects factory-installed cameras to aftermarket head units with camera input
- CAN interface integration – activates high-line cameras with dynamic guide lines and supports low-line camera systems
- Rgb to CVBS conversion – converts OEM rgb signal to CVBS, ensuring a smooth transition to aftermarket systems

The APVVW06 allows for the retention of the steering wheel controls as well as other vital features when installing an aftermarket unit into the vehicle. This interface features selectable dipswitches for dedicated applications, simply refer to the provided table for the correct configuration ensuring seamless integration.

Prior to installation

- Installation requires a certain level of technical knowledge.
- Prior to instal lation, it is important to read the manual.
- Select a location for installation that is dry and free from heat sources.
- It is essential to use the correct tools during installation to prevent any damage to the vehicle or the product itself.
- Please note that we cannot be held liable for any issues arising from improper installation.
- **Before proceeding with installation, disconnect the negative battery terminal and ensure the key is removed from the ignition.**

Installation at a glance

1

Set

Set the dipswitches for your stereo brand (page 4)

2

Connect

Remove the factory stereo and connect the interface (page 6)

3

Test

Check the stereo and steering wheel controls (page 8)

STEP 1

Set the dipswitches

This interface includes a set of dipswitches. Consult the dipswitch selection guide to select the appropriate configuration. To activate a dipswitch, press it downward into the 'ON' position. Refer to the diagram for an example of the 'KENWOOD1' dipswitch configuration.

SWC interface dipswitch configuration

MANUFACTURER	SYSTEM	DIPSWITCH CONFIGURATION				CONNECTION
		1	2	3	4	
AERPRO TYPE 1	Analog	OFF	OFF	OFF	**ON**	3.5MM JACK PLUG
AERPRO TYPE 2	Learning	OFF	**ON**	**ON**	OFF	KEY 1 / KEY 2 / KEY GND WIRES
ALPINE TYPE 1	IR Data	OFF	**ON**	OFF	OFF	3.5MM JACK PLUG
ALPINE TYPE 2	Learning	OFF	**ON**	**ON**	OFF	KEY 1 / KEY 2 / KEY GND WIRES
ANALOG SINGLE WIRE	Learning	**ON**	**ON**	**ON**	OFF	BROWN SWC/IR WIRE
ANALOG SINGLE (EXTEND)	Learning	**ON**	**ON**	**ON**	**ON**	BROWN SWC/IR WIRE
BLAUPUNKT	Learning	**ON**	**ON**	**ON**	OFF	3.5MM JACK PLUG
CLARION	IR Data	**ON**	OFF	OFF	**ON**	3.5MM JACK PLUG
ESX	Learning	OFF	**ON**	**ON**	OFF	KEY 1 / KEY 2 / KEY GND WIRES
GRUNDIG	IR Data	OFF	**ON**	OFF	**ON**	BROWN SWC/IR WIRE
JBL	Learning	OFF	**ON**	**ON**	OFF	KEY 1 / KEY 2 / KEY GND WIRES
JVC	IR Data	OFF	OFF	**ON**	OFF	BROWN SWC/IR WIRE
KENWOOD TYPE 1	IR Data	**ON**	OFF	OFF	OFF	BROWN SWC/IR WIRE
KENWOOD TYPE 2	IR Data	**ON**	**ON**	OFF	OFF	BROWN SWC/IR WIRE
KEY 1 / KEY 2	Learning	OFF	**ON**	**ON**	OFF	KEY 1 / KEY 2 / KEY GND WIRES
KEY 1 / KEY 2 (EXTEND)	Learning	OFF	**ON**	**ON**	**ON**	KEY 1 / KEY 2 / KEY GND WIRES
PHILIPS	IR Data	OFF	**ON**	OFF	**ON**	BROWN SWC/IR WIRE
PIONEER TYPE 1	Analog	OFF	OFF	OFF	**ON**	3.5MM JACK PLUG
PIONEER TYPE 2	Analog	OFF	OFF	**ON**	**ON**	3.5MM JACK PLUG
SONY	Analog	**ON**	OFF	**ON**	**ON**	3.5MM JACK PLUG
ZENEC	IR Data	**ON**	**ON**	OFF	**ON**	BROWN SWC/IR WIRE

INTERFACE DIPSWITCH 5 & 6
DIPSWITCH 5 ON = Key Sense Enable.
DIPSWITCH 6 OFF = Key Sense Run Time = 30 Minutes.
DIPSWITCH 6 ON = Key Sense Run Time = 60 Minutes.

KEY1 and KEY2	KEY1 and KEY2 are specifically tailored for analog learning mode-style radios.
KEY1 and KEY2 EXTEND	This mode extends every button press to 2 seconds during the learning process.
ANALOG SINGLE WIRE and EXTEND	This function operates similarly to KEY1 and KEY2 but transmits all unique values through the IR SWC single wire.

Camera interface dipswitch configuration



If the screen flashes briefly or displays a blank screen when the vehicle is placed into reverse after installing the interface, the dip switch settings may need to be adjusted.

Step 1 - Set Dip Switch 3 to OFF. Test the reverse camera. If the issue **remains, continue to Step 2.**

Step 2 - Set all dip switches (1–4) to OFF. Test the reverse camera. If the issue remains, continue to Step 3.

Step 3 - Set Dip Switch 3 to ON, with Dip Switches 1, 2 and 4 set to OFF. Test the reverse camera again.

REFERENCE

Stereo modes and wiring

ISO connector wiring key

Purple	Right Rear Speaker +	**Purple/Black**	Right Rear Speaker -
Green	Left Rear Speaker +	**Green/Black**	Left Rear Speaker -
Grey	Right Front Speaker +	**Grey/Black**	Right Front Speaker -
White	Left Front Speaker +	**White/Black**	Left Front Speaker -
Yellow	Permanent 12V	**Black**	Ground
Red	Ignition 12V	**Orange**	Illumination

Flying wire wiring key

Pink	Speed Pulse - 0 to 12V Square Wave @ 1Hz/Kph	**Green**	Park Brake
Purple/White	Reverse Gear - 250mA	**Orange**	Illumination - 250mA

Outputs & ratings

Standby Current	Operating Voltage	Operating Temperature
<3mA	**6V to 16V**	**-20C to 85C**

*rated at 25 degrees Centigrade

STEP 2

Connect the interface

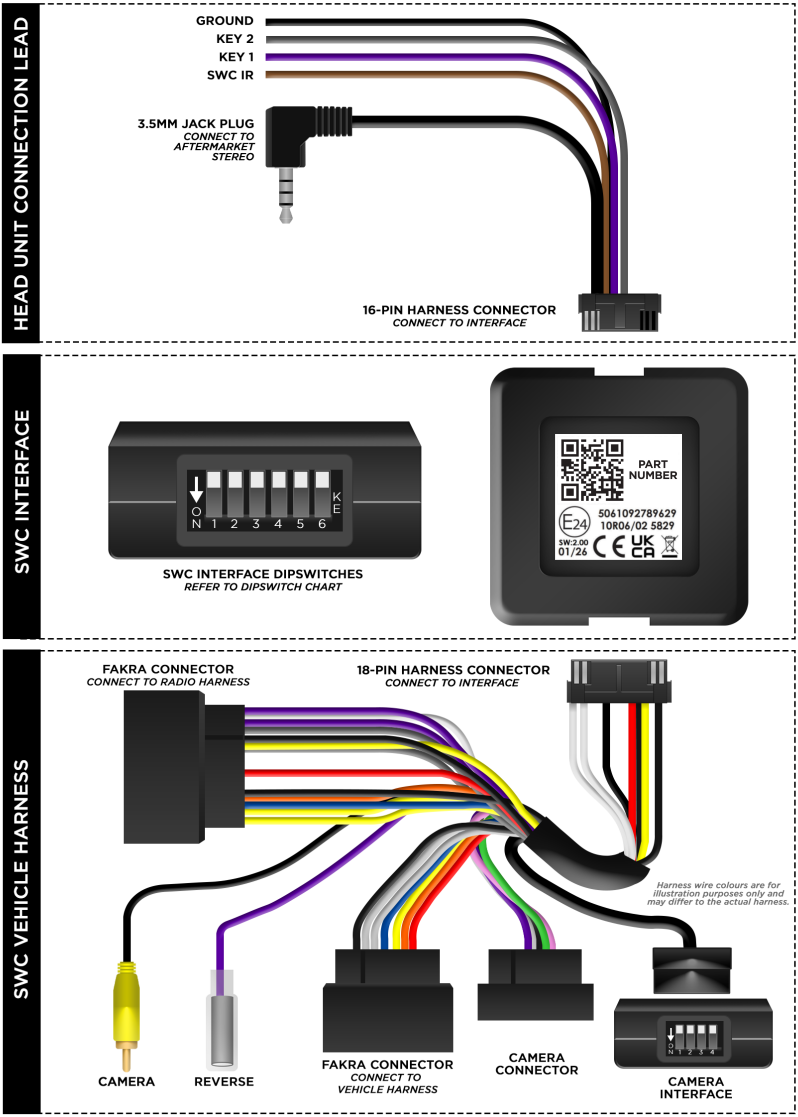

Before installation

Prior to installing the interface, it is essential to remove and disconnect the factory stereo. For guidance on this process, please refer to the vehicle owner's manual/handbook or seek assistance from a professional.

Installation

1. Take the interface, then connect the 16-PIN head unit connection lead and the 18-PIN steering wheel harness connectors to their respective ports.

2. Connect the head unit connection lead to the steering wheel remote input on the rear side of the aftermarket stereo. Connection methods vary based on the stereo brand, utilising either a 3.5mm jack connector SWC IR wire or wired inputs KEY1 and KEY2.

   For specific connection guidance, refer to your aftermarket stereo's installation manual if not clearly labelled on the stereo harness.

3. Connect the power/speaker ISO connector from the interface to the corresponding power/speaker ISO connection on the aftermarket stereo.

   For aftermarket stereos lacking an ISO connector, refer to the "Wiring Key" on page 5 for guidance on connecting wires. Certain interfaces may also include extra "flying" wires for additional functionalities such as parking brake trigger, reverse gear, and speed pulse. Further information on these wires is available in the "Flying Wire Wiring Key" section.

4. Connect the vehicle-specific connectors from the interface harness to the corresponding connectors on the vehicle harness.

5. Connect the flying wires on the harness to the rear of the stereo (if applicable).

6. Connect the antenna adapter to the vehicle's existing connection at the rear of the aftermarket stereo.

7. When installing an aftermarket reverse camera, connect the yellow RCA from the harness to the yellow RCA of the aftermarket camera. (If supported by the interface and vehicle)

8. When installing a DAB antenna, ensure to connect the DAB aerial connector to the rear of the new stereo.

9. After connecting all wires (along with any additional accessories), it's crucial to thoroughly test the stereo and steering wheel controls before reassembling the dashboard. If steering wheel controls are unresponsive, inspect connections and check dipswitch settings. Repeat the connection process if necessary, following the outlined steps.

STEP 3

Steering wheel controls

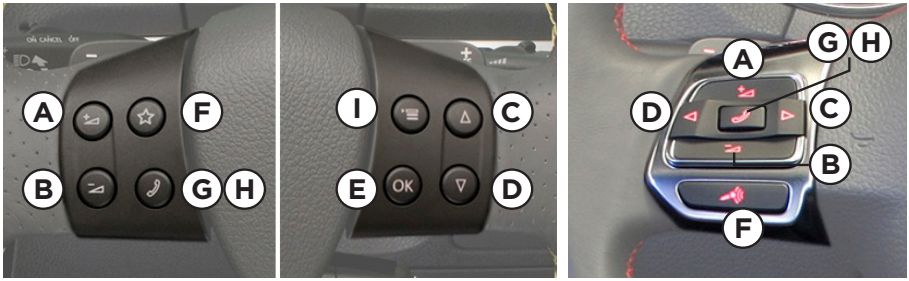

A Volume Up
B Volume Down
C Track Up
D Track Down
E Source
F Mute / Voice
G Pick Up
H Hang Up
I Vehicle Menu

The provided diagram, while meticulously researched, serves as an example only. Actual steering wheel control configurations may vary dependant on each vehicle.

Test before you reassemble the dash

With everything connected, test the stereo and every steering wheel button before you put the dash back together.

Button remapping

The steering wheel buttons listed offer the flexibility of being re-configured or assigned dual functions. The availability of these buttons depends on the specific vehicle to which the interface is being installed and if the aftermarket radio supports them. In addition to button remapping, we offer the option to assign dual functions to each button on the steering wheel. This means that every button can be programmed to execute both a short press command and a long press command. You can also add your own bespoke configuration. Button configuration can be done by PC, MAC and smart phone via the USB port.

Button Remapping instructions can be found in a separate guide on our website.

Technical support

If you need assistance setting up or using your Aerpro product now or in the future, call Aerpro Support Australia.

03 8587 8889

Mon to Fri, 9am to 5pm AEST. If you would like to download a digital copy of this manual, or other Aerpro manuals/software, please visit aerpro.com